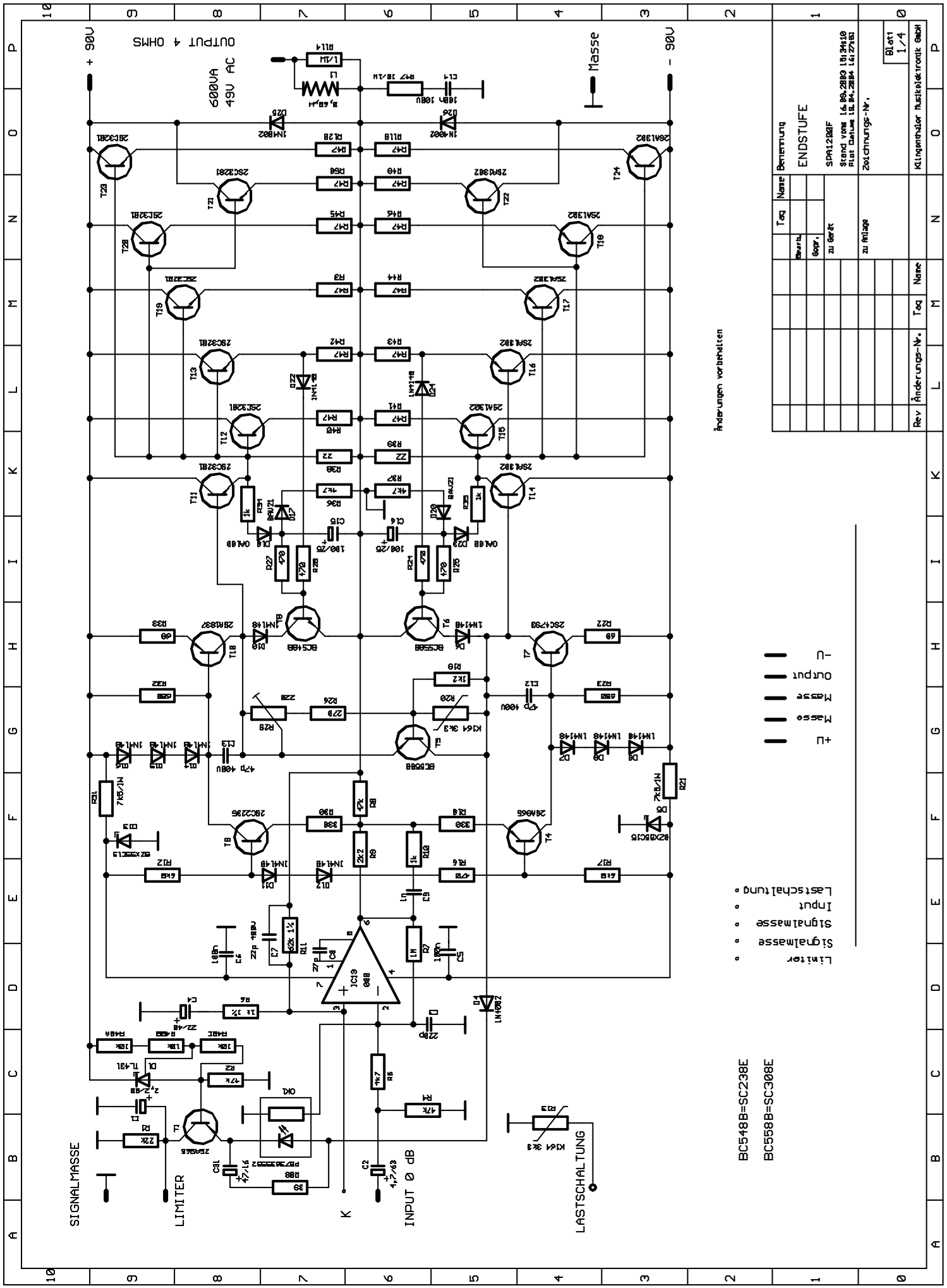

19.04.2004 16:27:51 f=0.704 H:\eagle35\spa1200F\SPA1200F.sch (Sheet: 1/4)

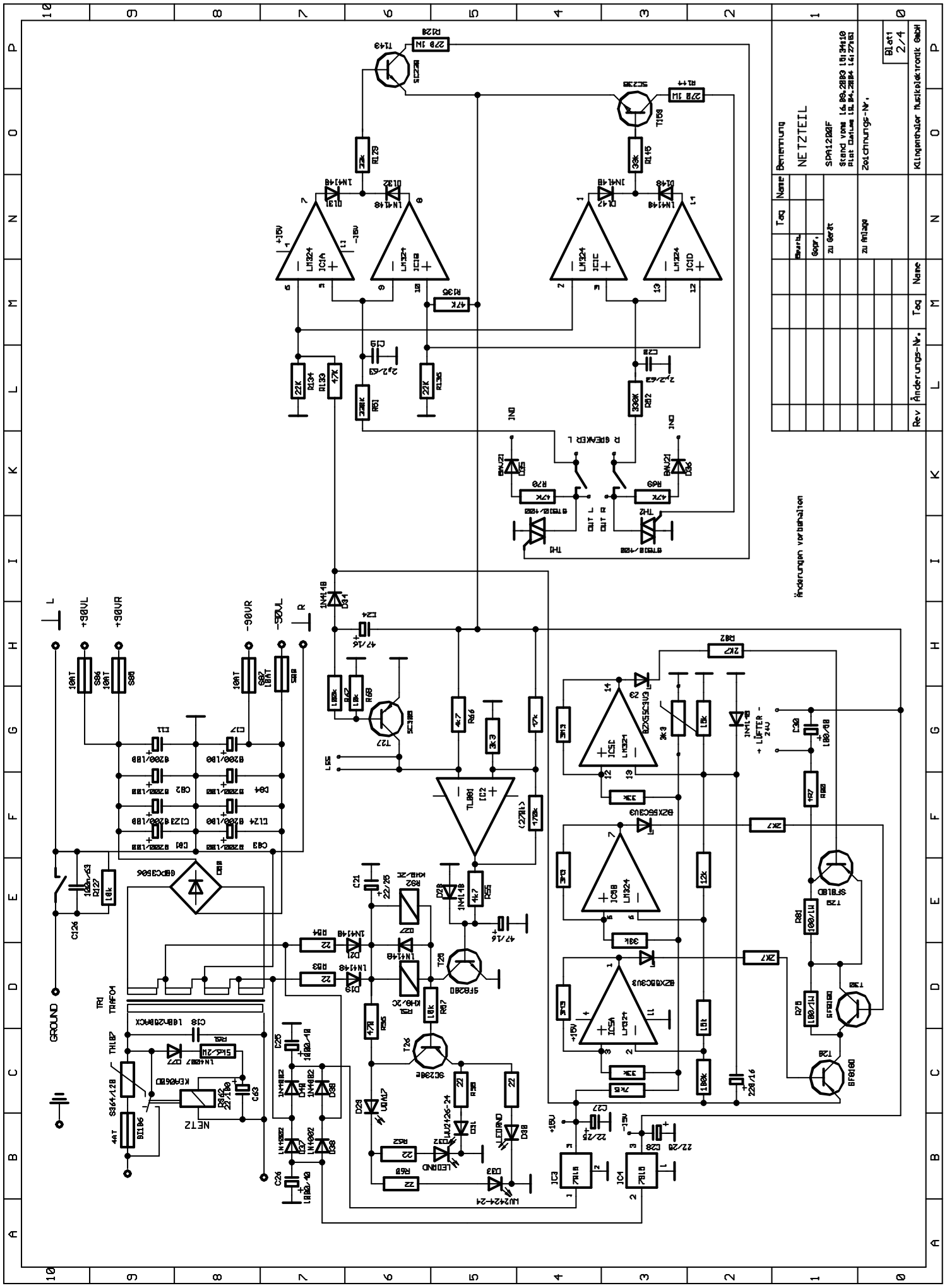

19.04.2004 16:27:51 f=0.704 H:\eagle35\spa1200F\SPA1200F.sch (Sheet: 2/4)

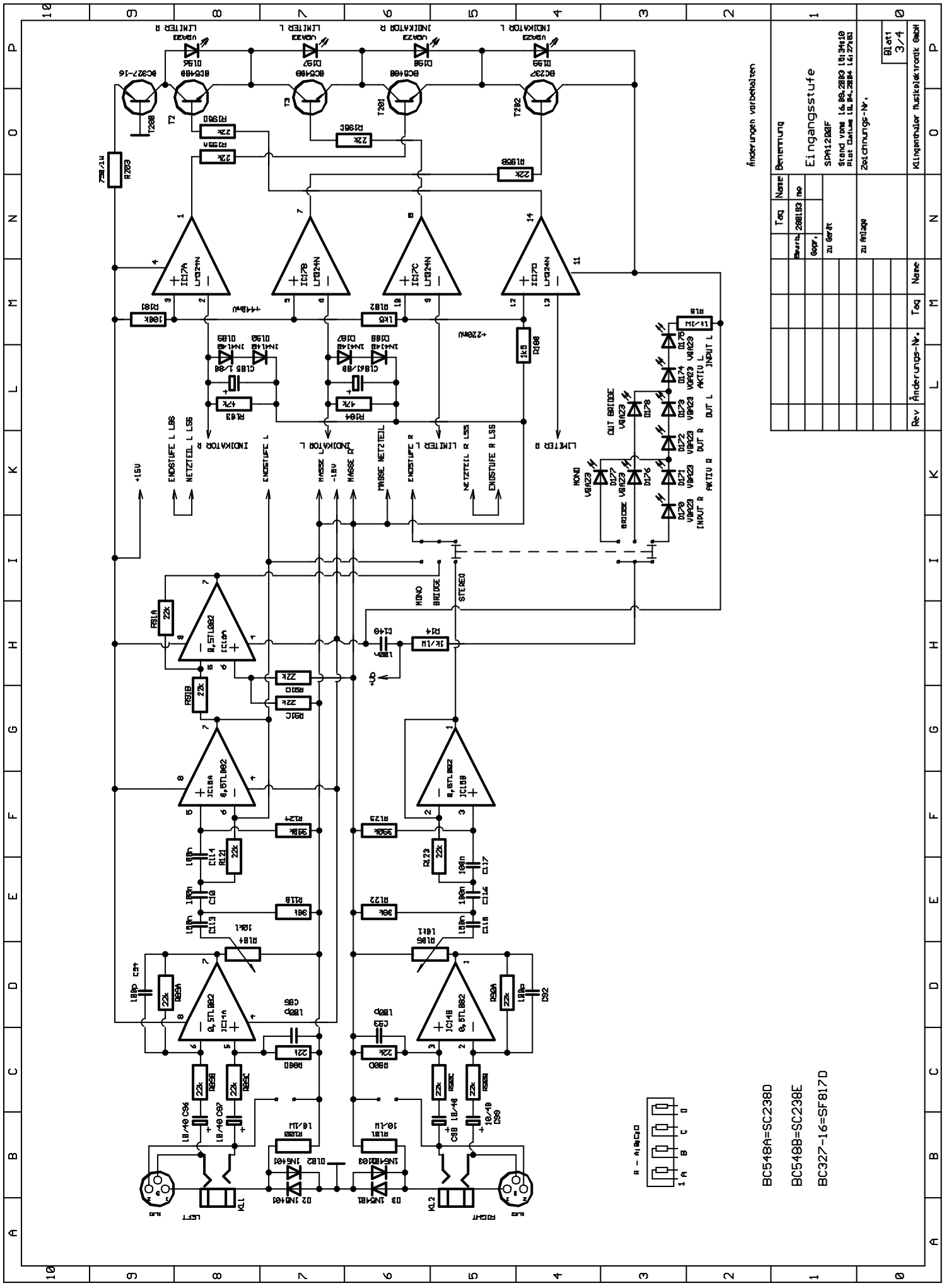

19.04.2004 16:27:51 f=0.704 H:\eagle35\spa1200F\SPA1200F.sch (Sheet: 3/4)

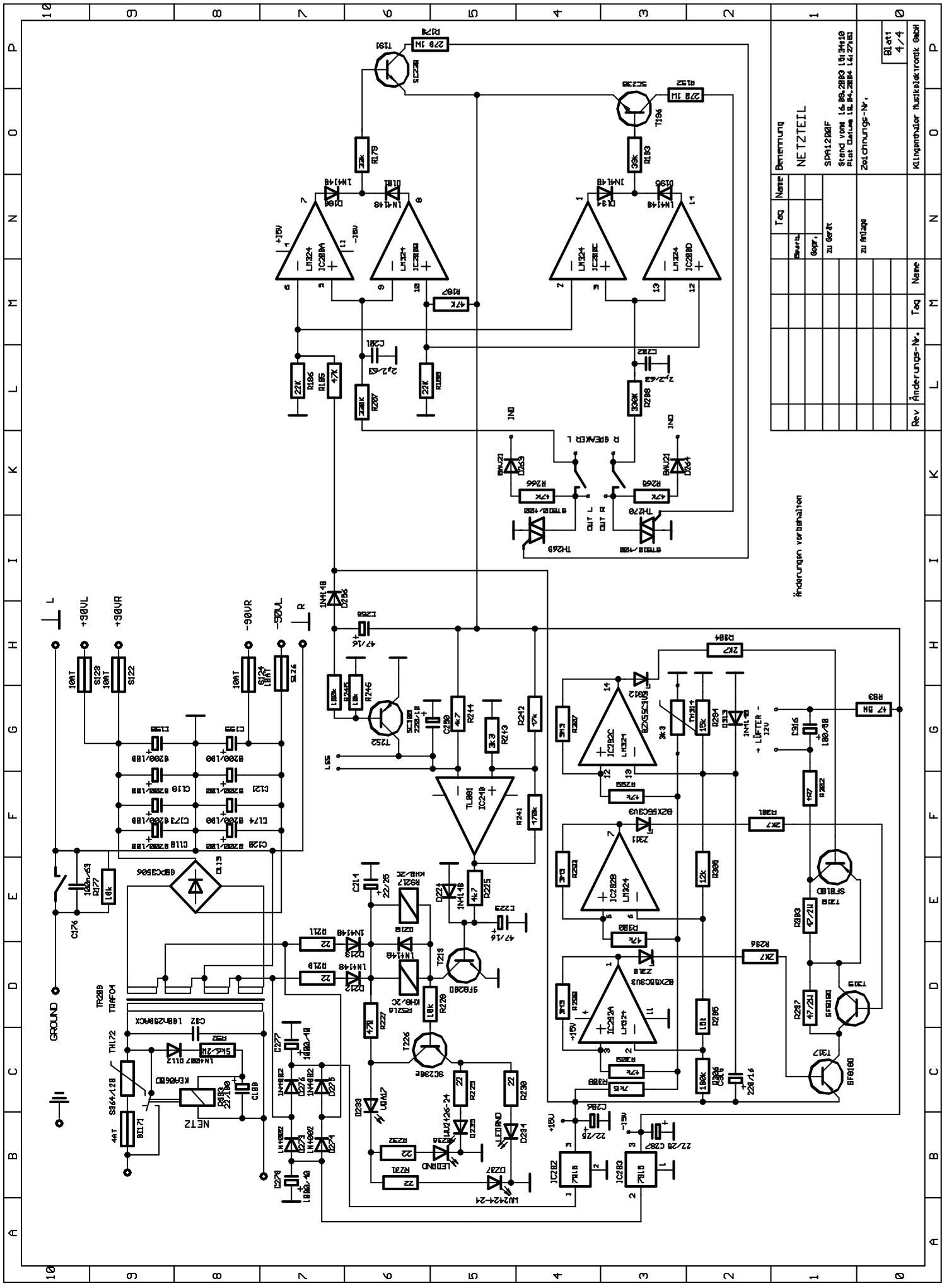

19.04.2004 16:27:51 f=0.704 H:\eagle35\spa1200F\SPA1200F.sch (Sheet: 4/4)